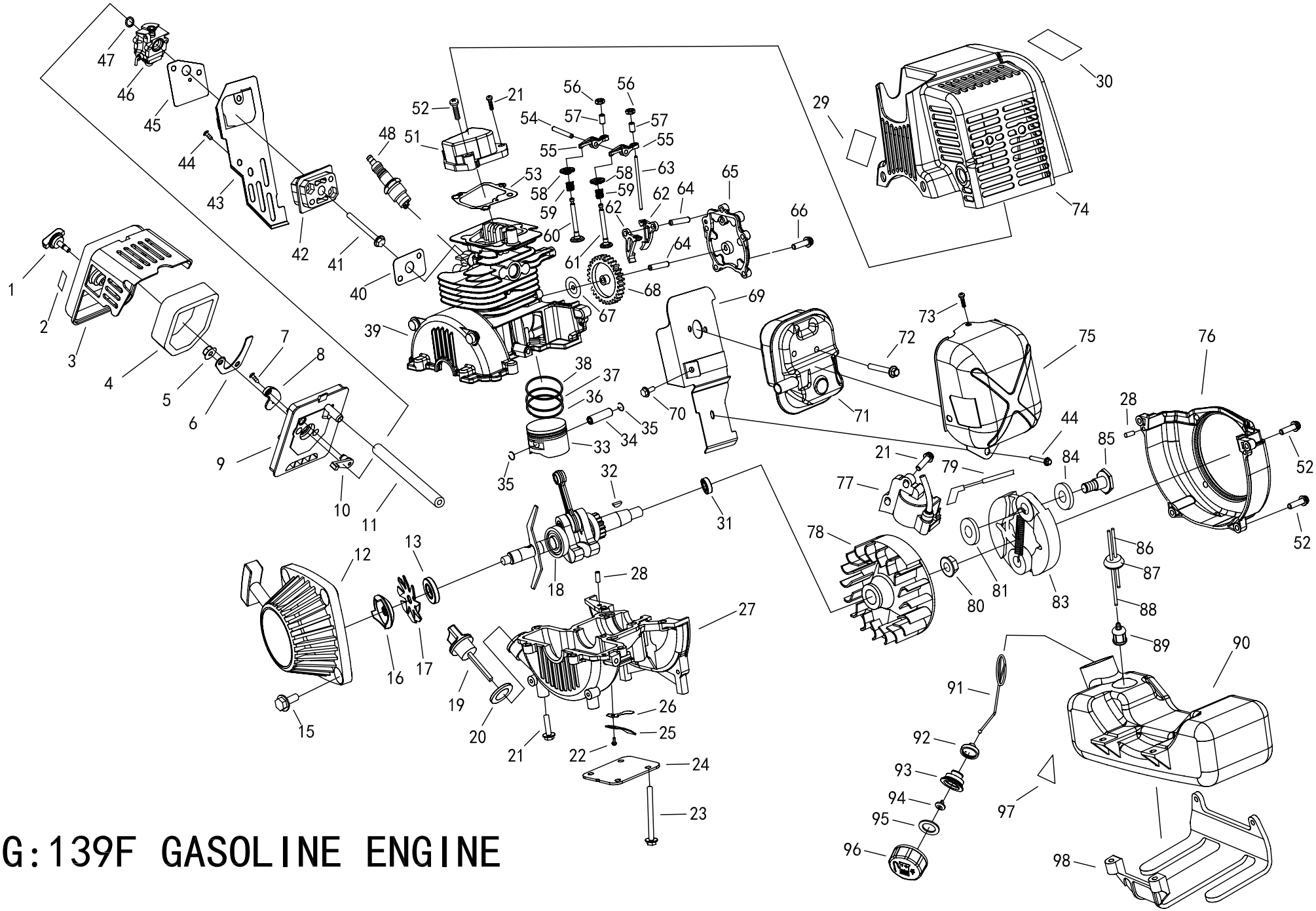

FIG:139F GASOLINE ENGINE